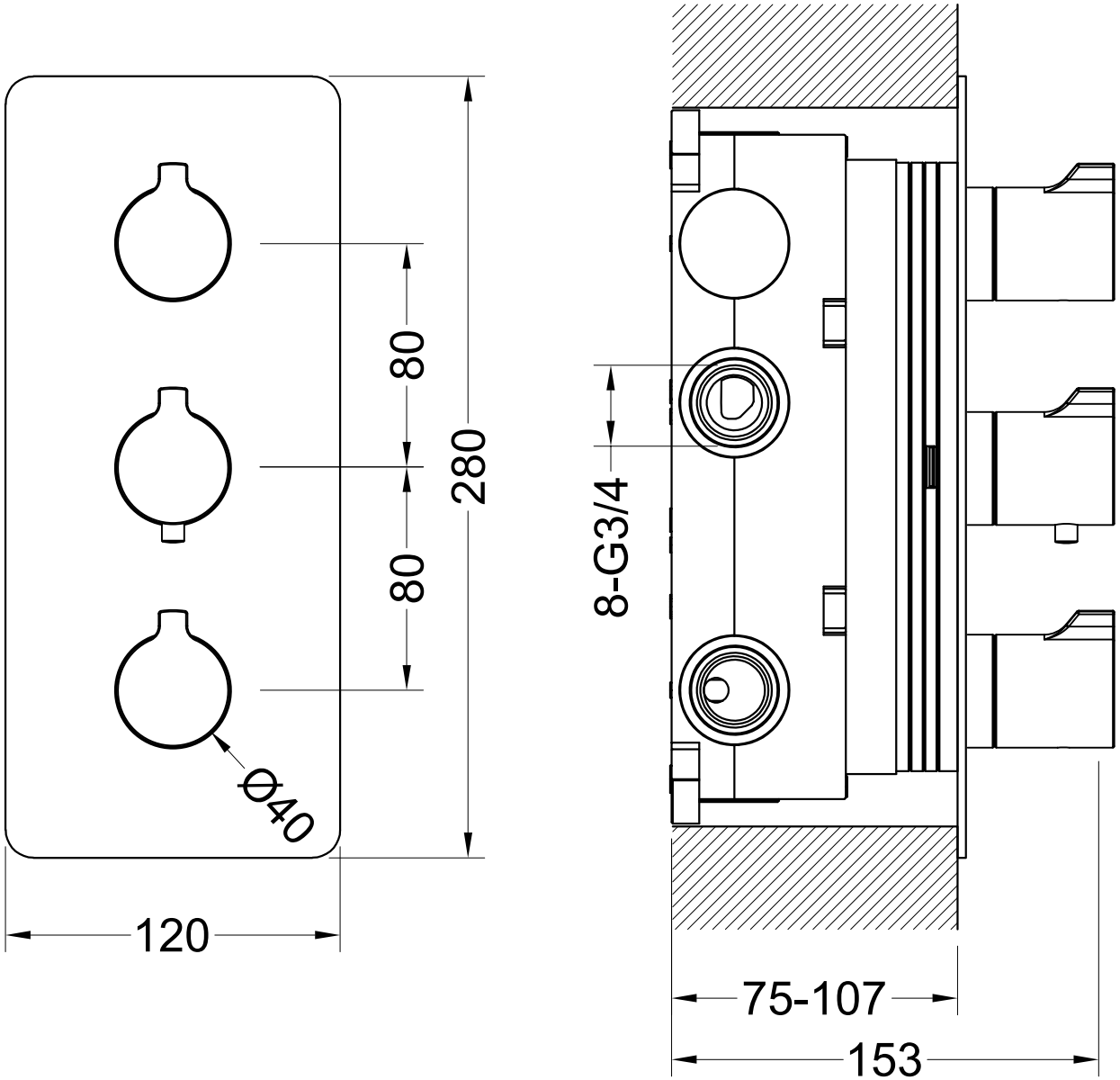
80
80
280
Ø40
120
8-G3/4
75-107
153